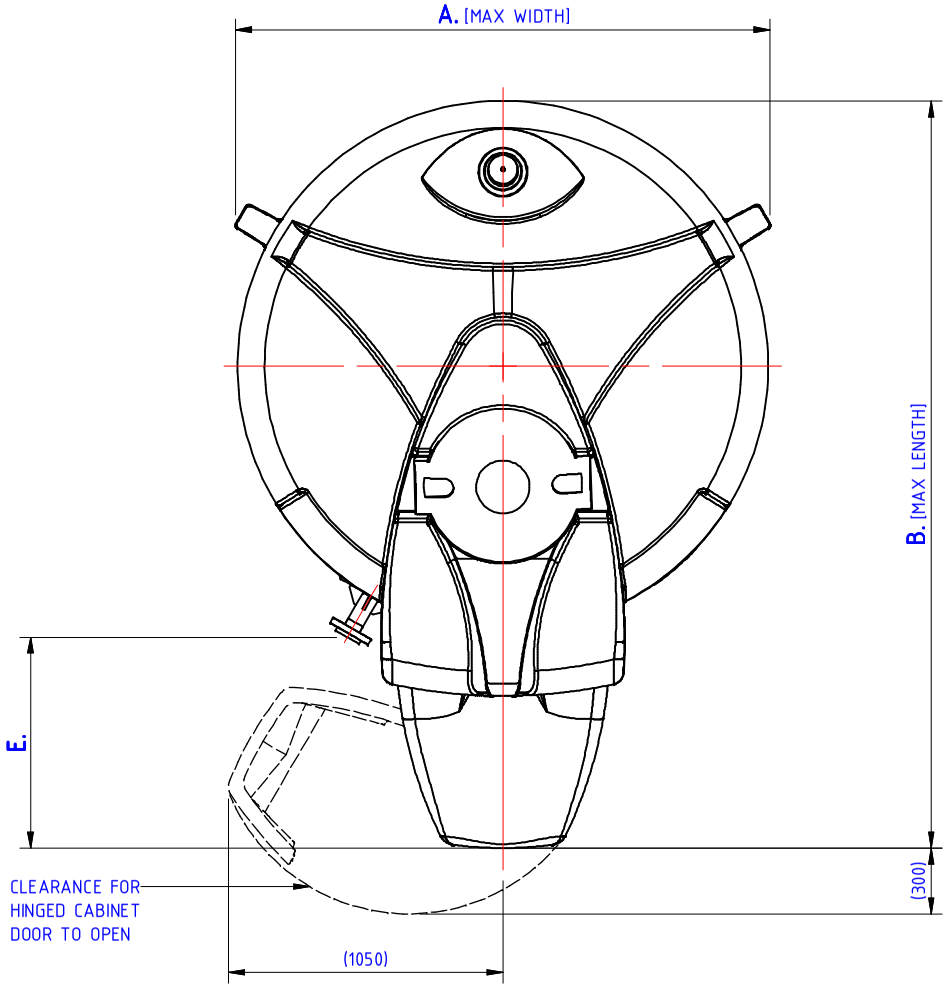

PLAN

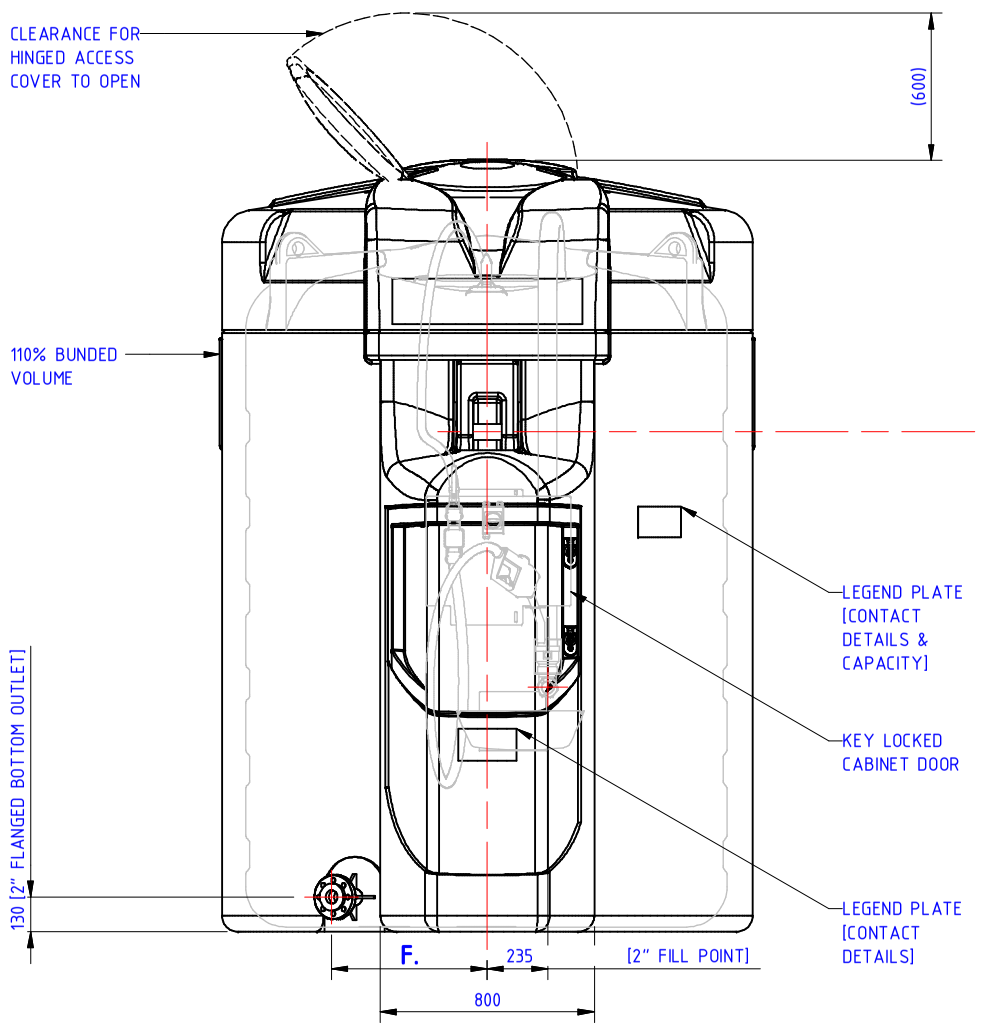

ELEVATION

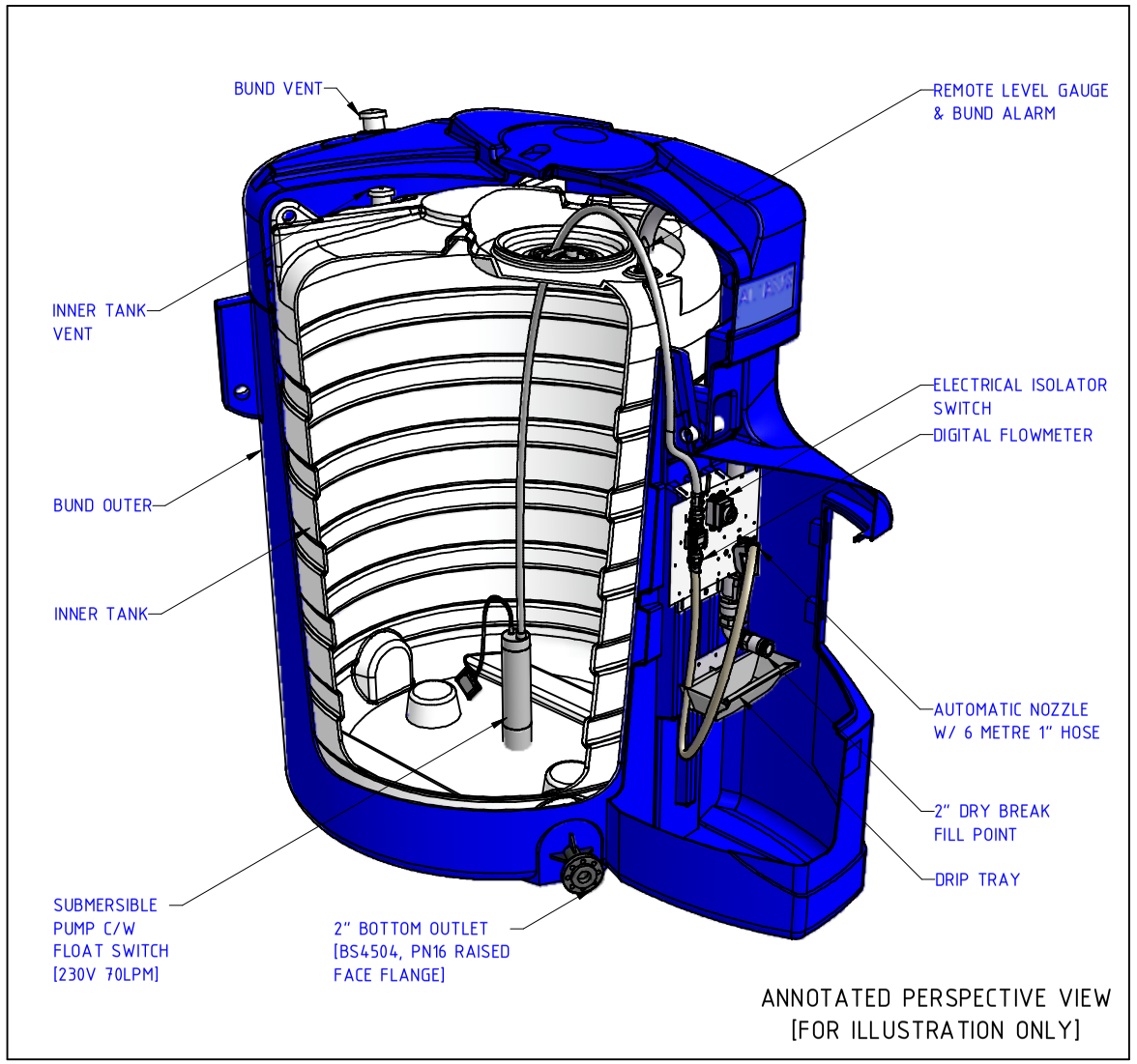

ANNOTATED PERSPECTIVE VIEW
[FOR ILLUSTRATION ONLY]

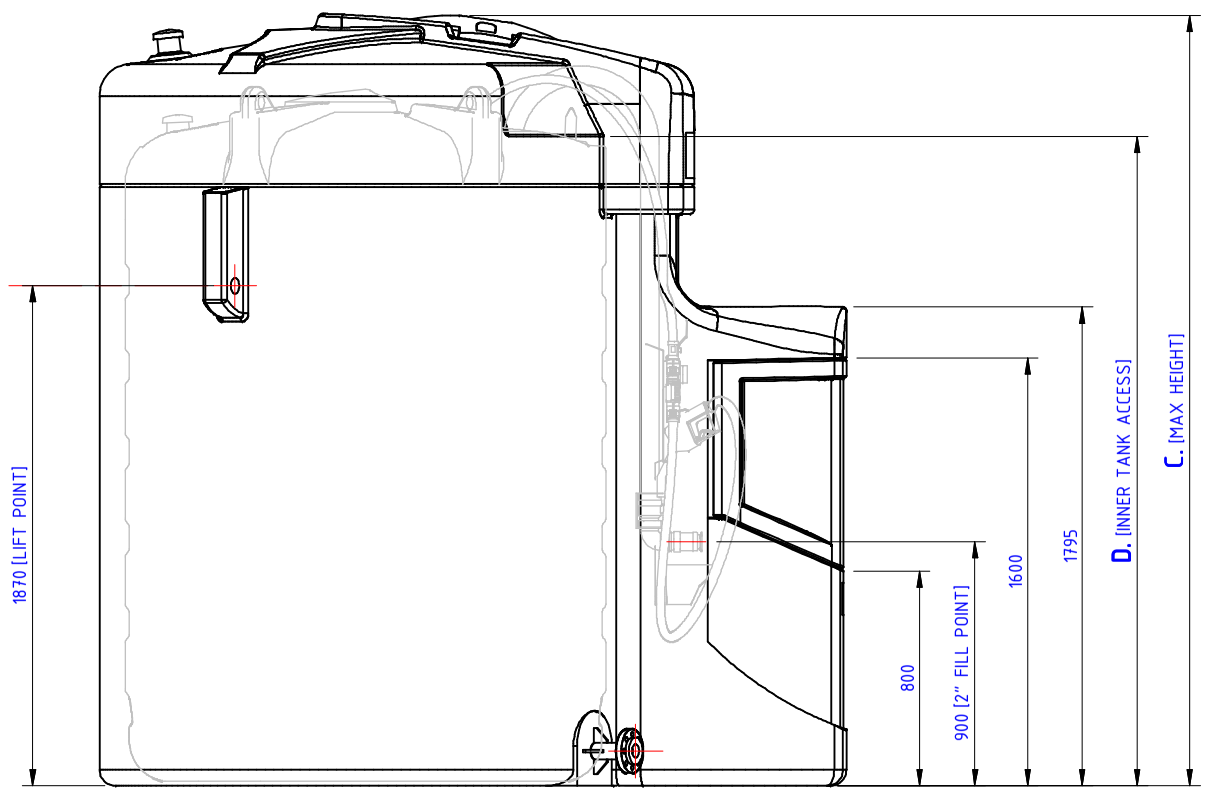

SIDE ELEVATION

THIS DRAWING IS COPYRIGHT AND IS ISSUED ON CONDITION THAT IT IS NOT COPIED, REPRODUCED OR DISCLOSED TO A THIRD PARTY WITHOUT CONSENT IN WRITING OF BALMORAL GROUP LTD., ABERDEEN

FIRST ANGLE PROJECTION | THIRD ANGLE PROJECTION

ALL DIMENSIONS IN MILLIMETRES UNLESS STATED OTHERWISE - DO NOT SCALE
IF IN DOUBT - ASK

ITEM	DESCRIPTION	MATERIAL	QTY.	REMARKS

VB5000, 7500 AND 10,000 SUPERBLUE DISPENSING BOTTOM OUTLET

PRODUCT FEATURES:

- 2" DRY BREAK FILL POINT
- 2" BOTTOM OUTLET [BS4504, PN16 RAISED FACE FLANGE]
- SUBMERSIBLE PUMP C/W FLOAT SWITCH [230V 70LPM]
- AUTOMATIC NOZZLE W/ 6METRE 1" HOSE
- DIGITAL FLOWMETER
- REMOTE LEVEL GAUGE & BUND ALARM

MATERIALS CONTAINMENT:

- AD-BLUE [AUS 32, DIN 70070 GRADE]

TECHNICAL INFORMATION:

- PRODUCT WEIGHT [EMPTY OF FLUIDS] -
  - 5000 LITRE - 450KG
  - 7500 LITRE - 560KG
  - 10,000 LITRE - 670KG
- ELECTRICAL SUPPLY - 230V, 6A.
- LEVEL GAUGE SETTING -
  - 5000 LITRE - 1, 2, 4, 5, 7.
  - 7500 LITRE - 1, 2, 3, 6.
  - 10,000 LITRE - 1, 2, 3, 5, 8.

GENERAL NOTES:

- ALL ELECTRICAL WORK MUST BE CARRIED OUT BY A QUALIFIED ELECTRICIAN
- FOLLOW INSTALLATION AND OPERATING INSTRUCTIONS

TANK MEASUREMENTS						
-	A	B	C	D	E	F
5000LITRE	2005	2795	2885	2470	790	585
7500LITRE	2305	3115	3020	2670	810	665
10,000LITRE	2510	3320	3150	2770	825	715

ALL MEASUREMENTS ARE FOR REFERENCE ONLY

BALMORAL TANKS RESERVE THE RIGHT TO REVISE THEIR PRODUCT DESIGNS AT ANY TIME.

ISSUE	MODIFICATION	BY	CHK	APV	DATE
01	FIRST ISSUE	SI	BJB	BJB	11/03/08

Global HQ
Balmoral Park, Loirston, Aberdeen AB12 3GY
Tel +44 (0)1224 859000 Fax +44 (0)1224 859059
Email group@balmoral.co.uk www.balmoral-group.com

BALMORAL
www.balmoral-group.com

CLIENT	PROJECT No.
BALMORAL TANKS SALES	6428

DRAWING TITLE
VB5000, 7500, 10,000 - G.A. SUPERBLUE
BBND-SB5000/7500/10000-NG-SF-FM-BE

DRAWN BY	CHECKED BY	APPROVED BY	DRAWING No.
S.IRONSIDE	B.BAKEWELL	B.BAKEWELL	INVD-006
SCALE	DATE	SHEET SIZE	JOB No.
1:20	11th MAR 2008	A2	

FOR INTERNAL USE ONLY

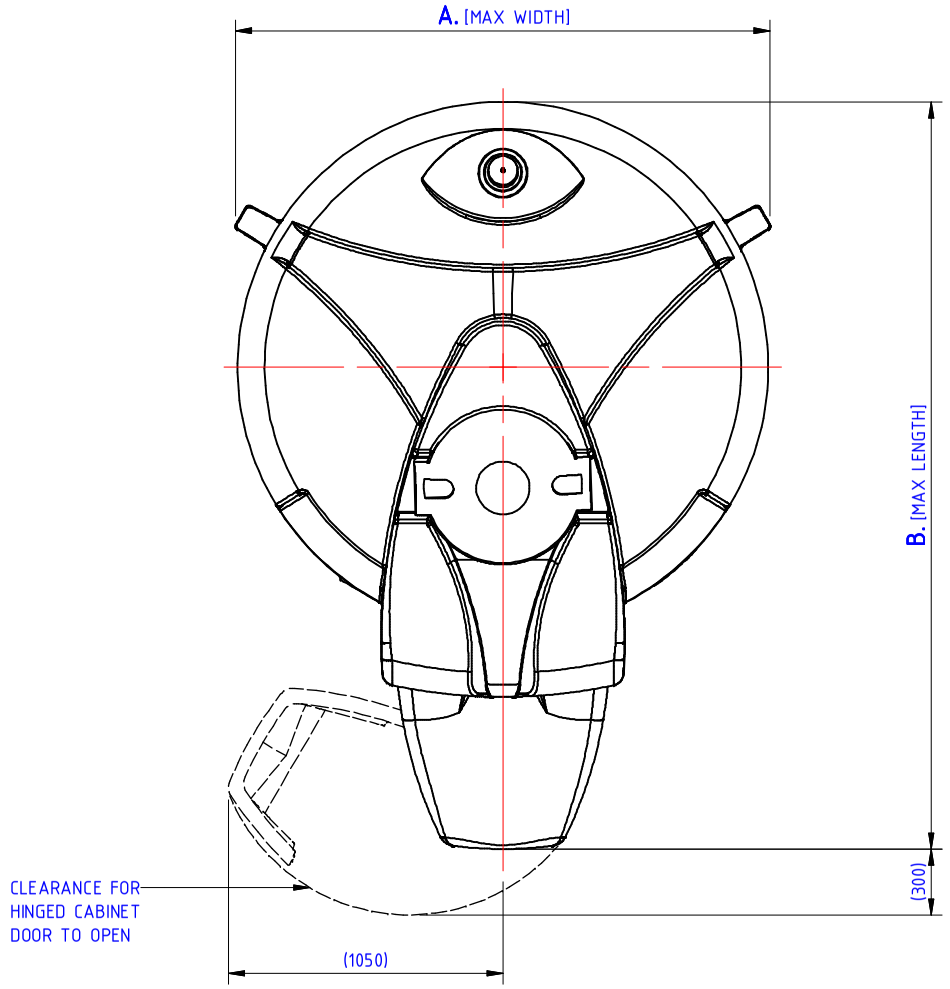

PLAN

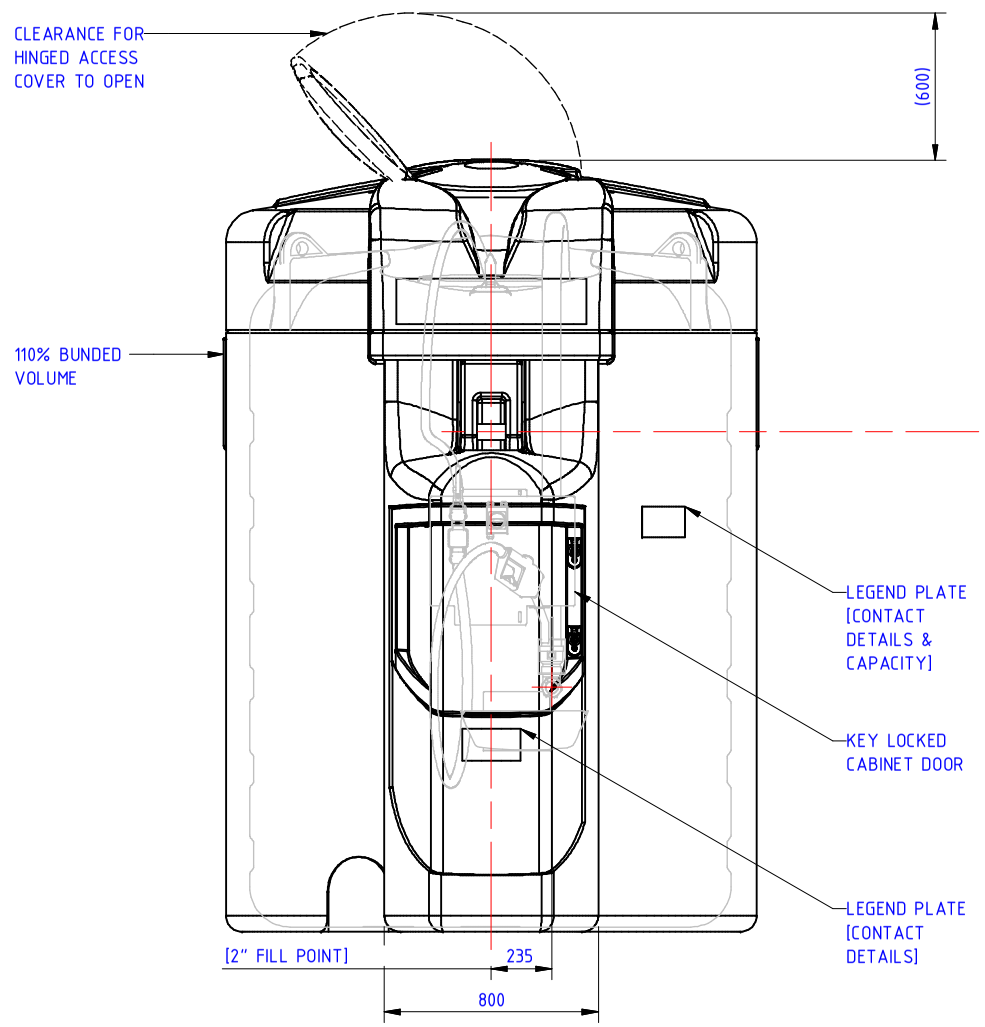

ELEVATION

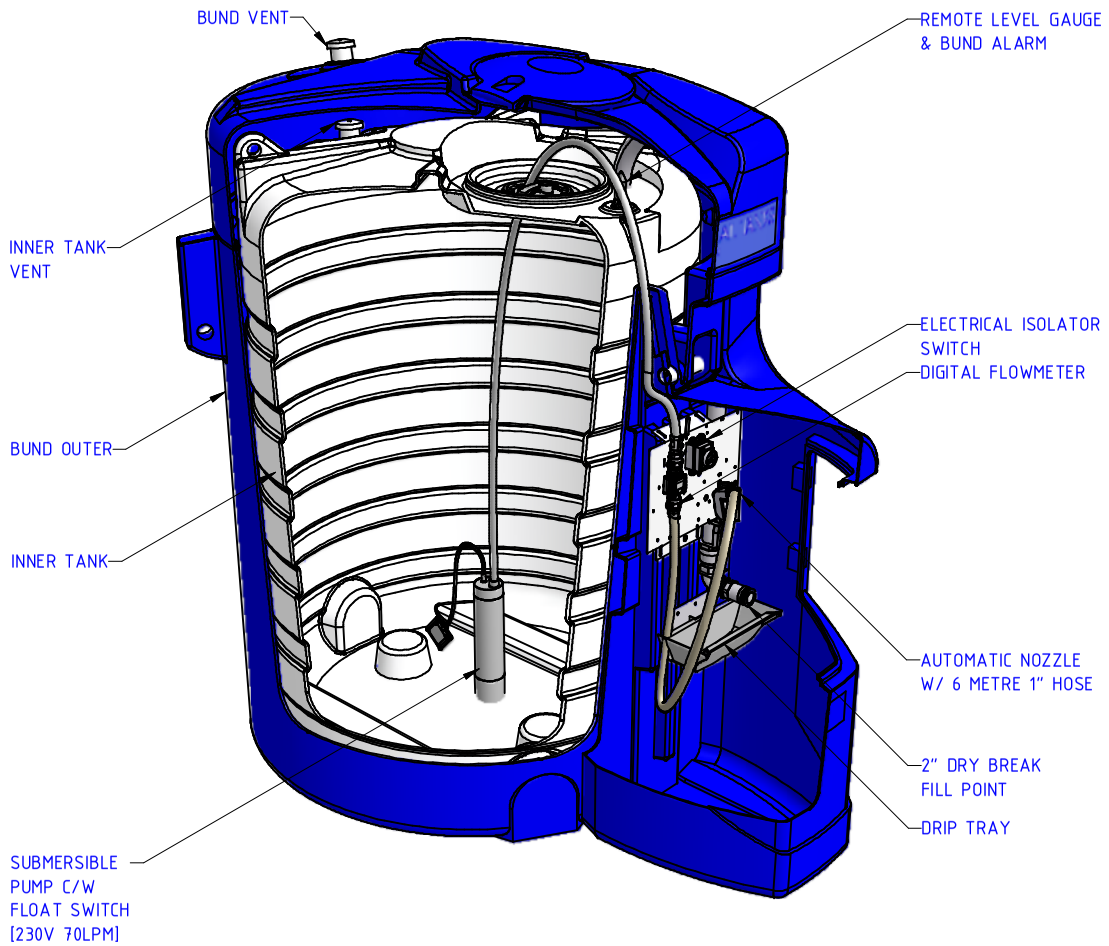

ANNOTATED PERSPECTIVE VIEW
[FOR ILLUSTRATION ONLY]

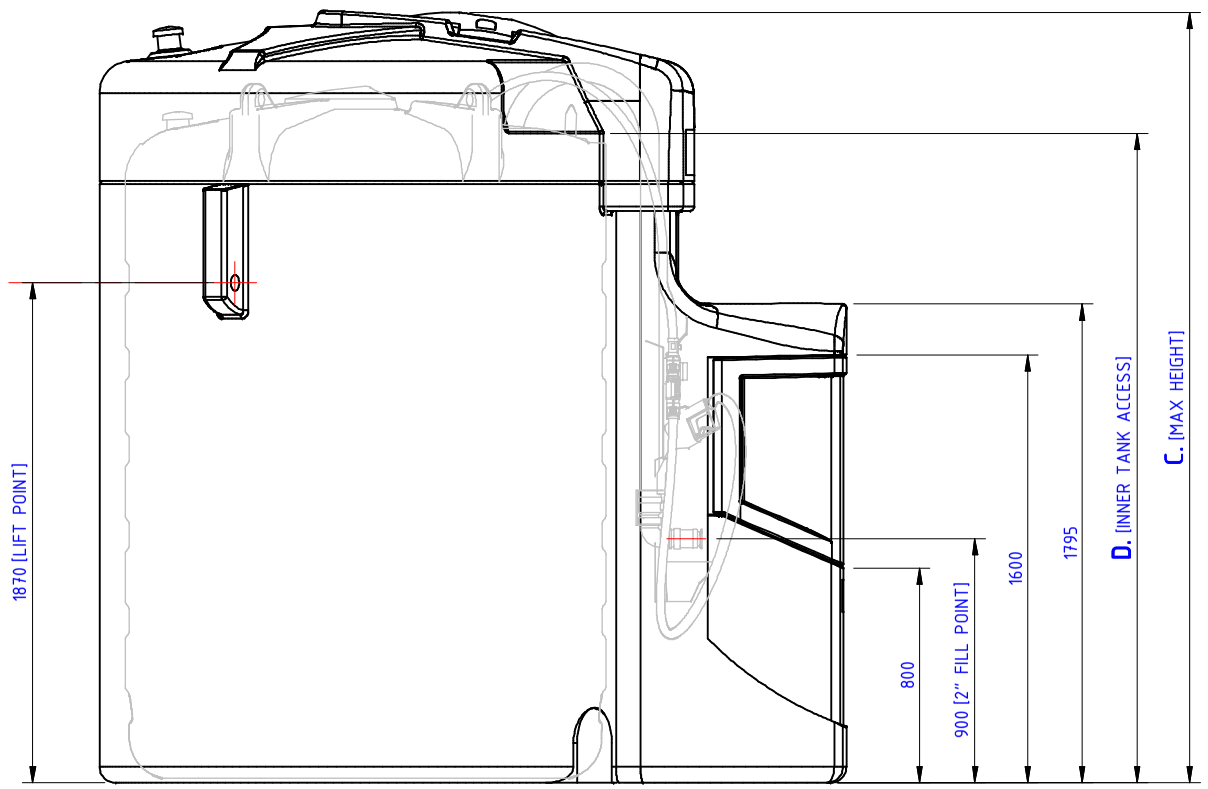

SIDE ELEVATION

THIS DRAWING IS COPYRIGHT AND IS ISSUED ON CONDITION THAT IT IS NOT COPIED, REPRODUCED OR DISCLOSED TO A THIRD PARTY WITHOUT CONSENT IN WRITING OF BALMORAL GROUP LTD., ABERDEEN

FIRST ANGLE PROJECTION | THIRD ANGLE PROJECTION

ALL DIMENSIONS IN MILLIMETRES UNLESS STATED OTHERWISE - DO NOT SCALE
IF IN DOUBT - ASK

ITEM	DESCRIPTION	MATERIAL	QTY.	REMARKS

VB5000, 7500 AND 10,000 SUPERBLUE DISPENSING

PRODUCT FEATURES:

- 2" DRY BREAK FILL POINT
- SUBMERSIBLE PUMP C/W FLOAT SWITCH [230V 70LPM]
- AUTOMATIC NOZZLE W/ 6METRE 1" HOSE
- DIGITAL FLOWMETER
- REMOTE LEVEL GAUGE & BUND ALARM

MATERIALS CONTAINMENT:

- AD-BLUE [AUS 32, DIN 70070 GRADE]

TECHNICAL INFORMATION:

- PRODUCT WEIGHT [EMPTY OF FLUIDS] -
  - 5000 LITRE - 445KG
  - 7500 LITRE - 555KG
  - 10,000 LITRE - 665KG
- ELECTRICAL SUPPLY - 230V, 6A.
- LEVEL GAUGE SETTING -
  - 5000 LITRE - 1, 2, 4, 5, 7.
  - 7500 LITRE - 1, 2, 3, 6.
  - 10,000 LITRE - 1, 2, 3, 5, 8.

GENERAL NOTES:

- ALL ELECTRICAL WORK MUST BE CARRIED OUT BY A QUALIFIED ELECTRICIAN
- FOLLOW INSTALLATION AND OPERATING INSTRUCTIONS

TANK MEASUREMENTS				
-	A	B	C	D
5000LITRE	2005	2795	2885	2470
7500LITRE	2305	3115	3020	2670
10,000LITRE	2510	3320	3150	2770

ALL MEASUREMENTS ARE FOR REFERENCE ONLY
BALMORAL TANKS RESERVE THE RIGHT TO REVISE THEIR PRODUCT DESIGNS AT ANY TIME.

ISSUE	MODIFICATION	BY	CHK	APV	DATE
01	FIRST ISSUE	SI	BJB	BJB	11/03/08

Global HQ
Balmoral Park, Loirston, Aberdeen AB12 3GY
Tel +44 (0)1224 859000 Fax +44 (0)1224 859059
Email group@balmoral.co.uk www.balmoral-group.com

BALMORAL
www.balmoral-group.com

CLIENT: BALMORAL TANKS SALES

PROJECT No.: 6428

DRAWING TITLE: VB5000, 7500, 10,000 - G.A. SUPERBLUE
BBND-SB5000/7500/10000-NG-SF-FM

DRAWN BY	CHECKED BY	APPROVED BY	DRAWING No.
S.IRONSIDE	B.BAKEWELL	B.BAKEWELL	INVD-005
SCALE	DATE	SHEET SIZE	JOB No.
1:20	11th MAR 2008	A2	

FOR INTERNAL USE ONLY: JS | WH | IR | SP | Fram | Buff | Blast | Fab | QC | MKW | Proj

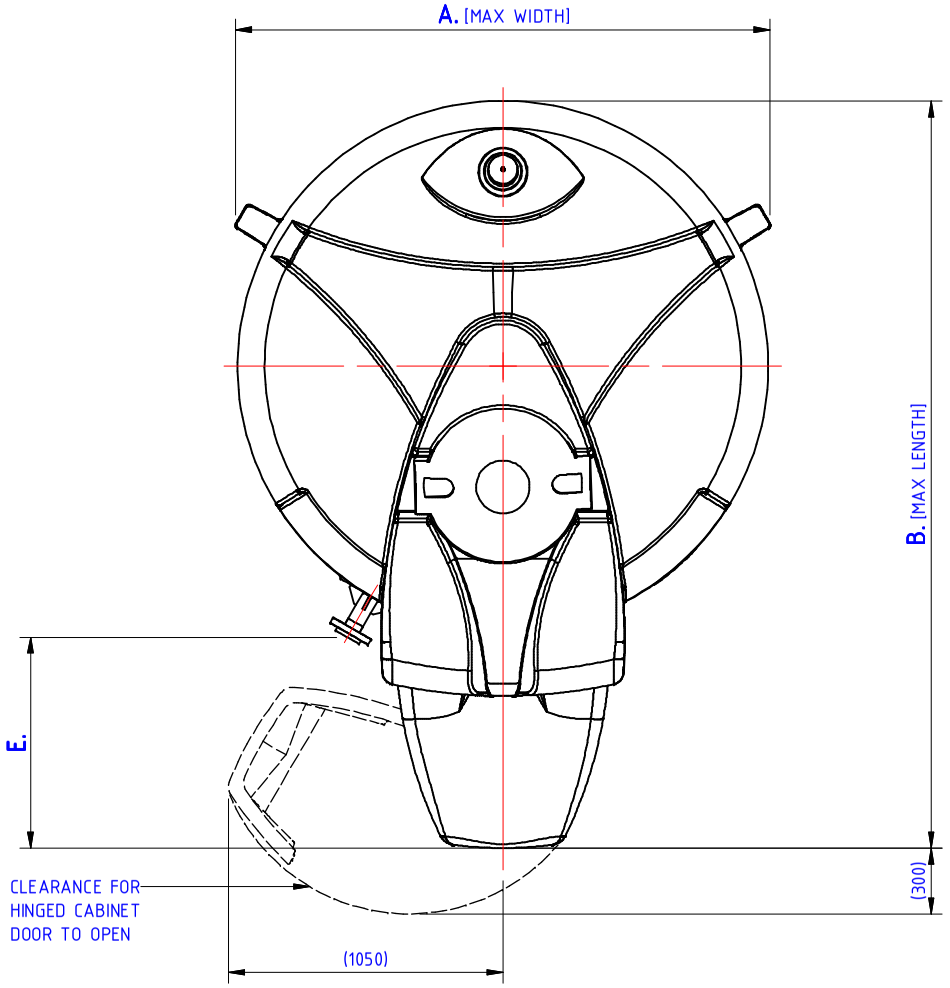

PLAN

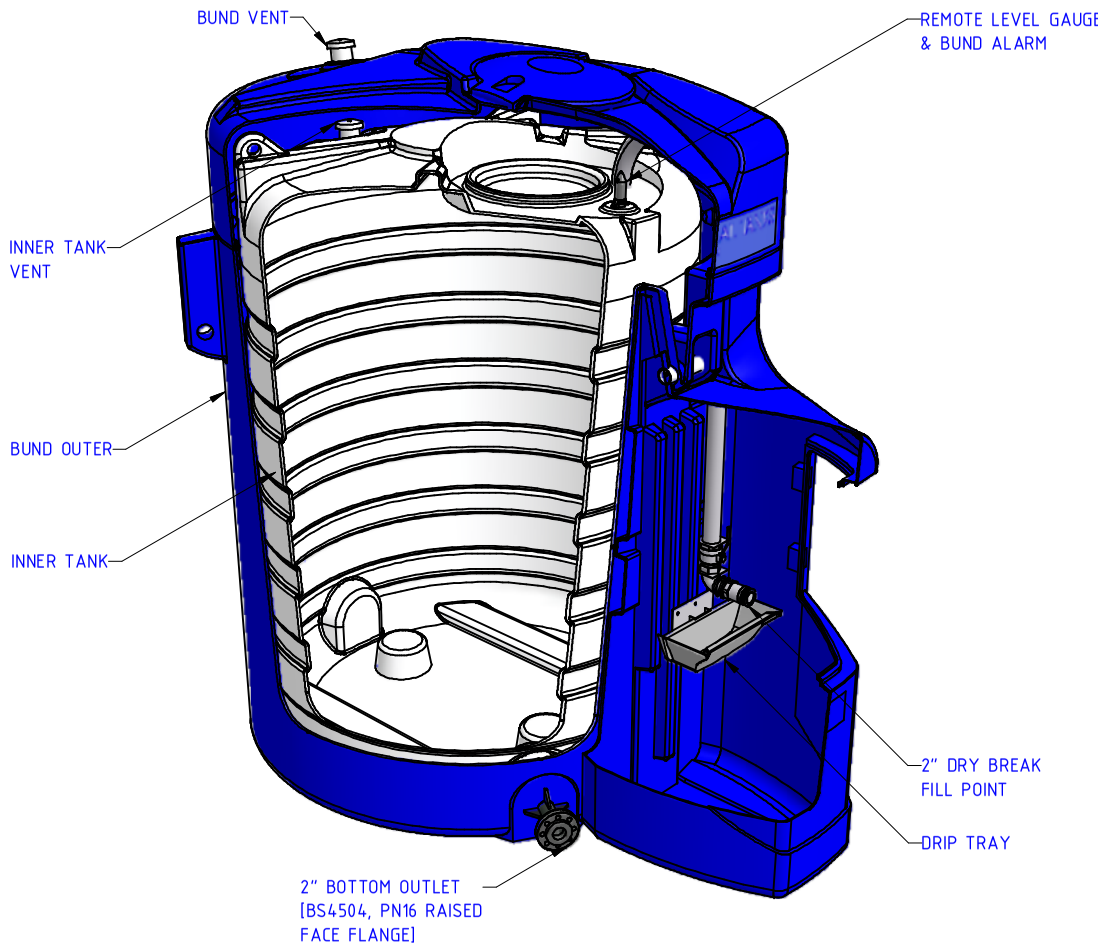

ANNOTATED PERSPECTIVE VIEW
[FOR ILLUSTRATION ONLY]

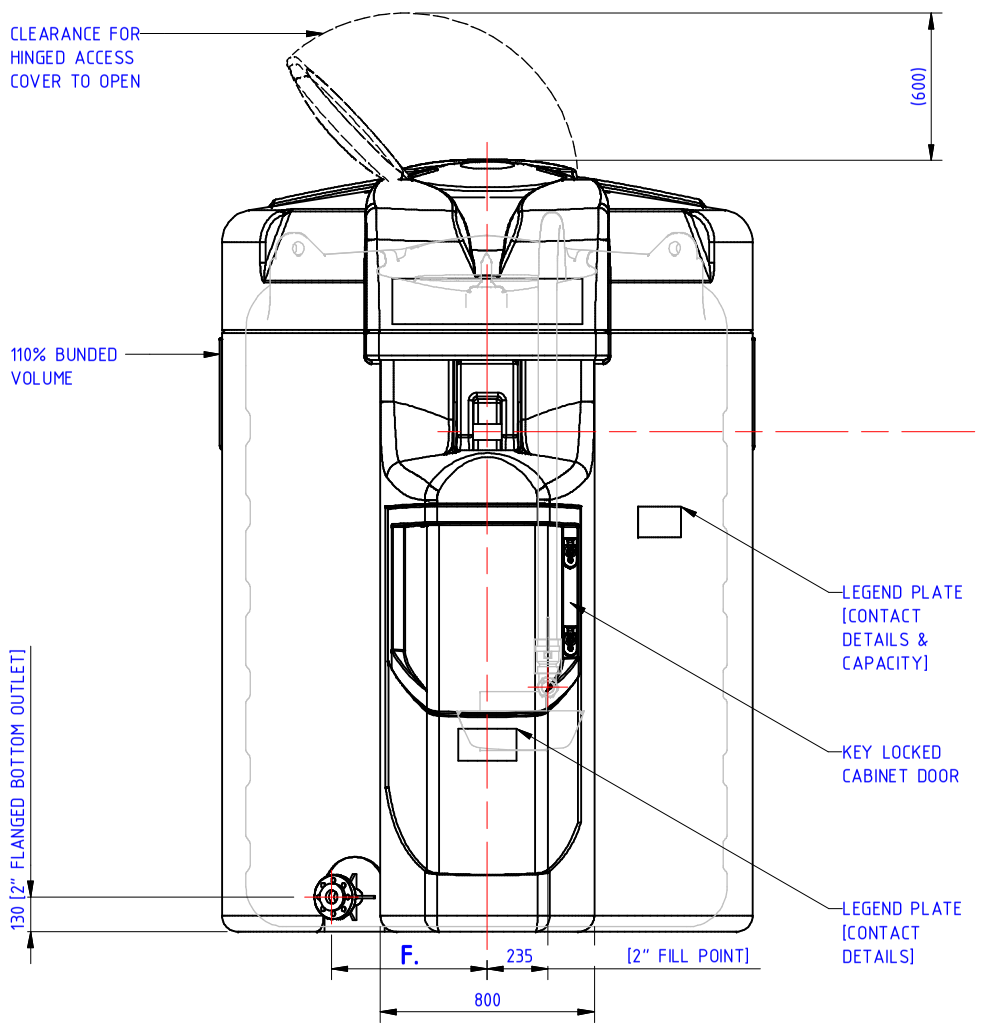

ELEVATION

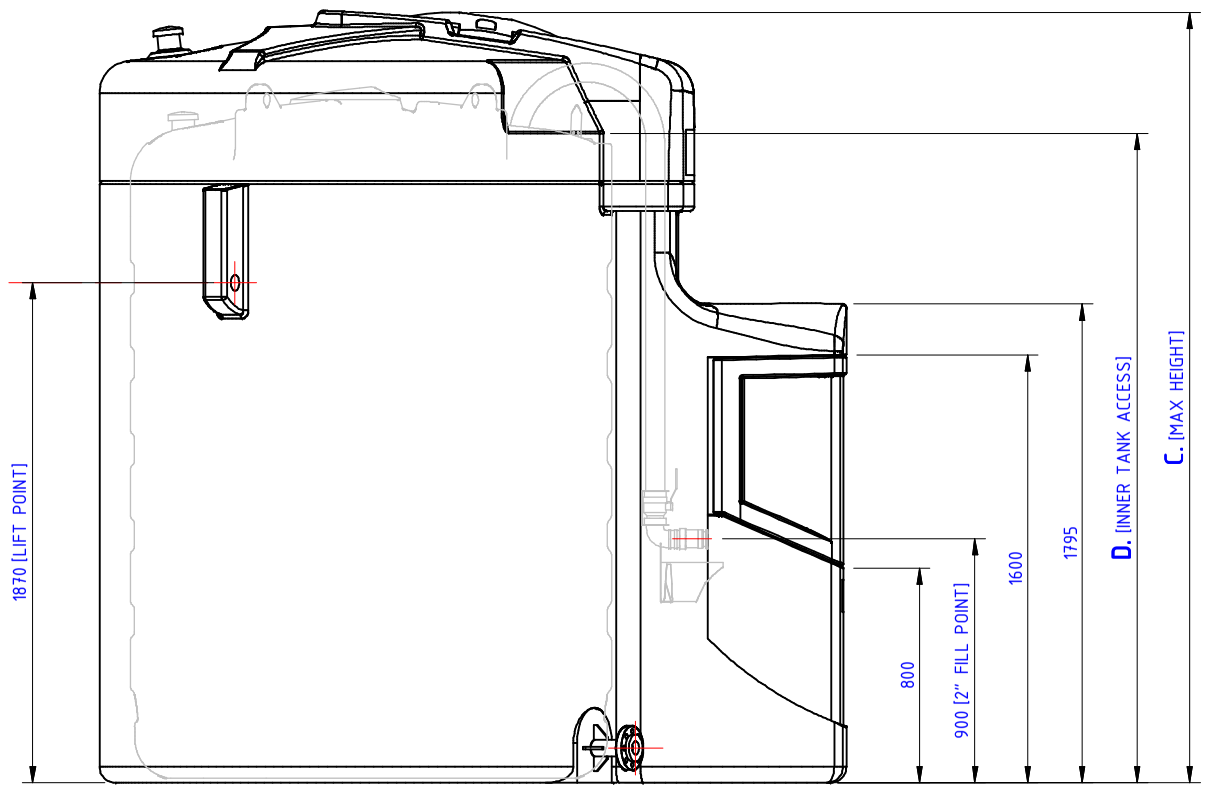

SIDE ELEVATION

THIS DRAWING IS COPYRIGHT AND IS ISSUED ON CONDITION THAT IT IS NOT COPIED, REPRODUCED OR DISCLOSED TO A THIRD PARTY WITHOUT CONSENT IN WRITING OF BALMORAL GROUP LTD., ABERDEEN

FIRST ANGLE PROJECTION | THIRD ANGLE PROJECTION

ALL DIMENSIONS IN MILLIMETRES UNLESS STATED OTHERWISE - DO NOT SCALE
IF IN DOUBT - ASK

ITEM	DESCRIPTION	MATERIAL	QTY.	REMARKS

VB5000, 7500 AND 10,000 SUPERBLUE FORECOURT

PRODUCT FEATURES:
- 2" DRY BREAK FILL POINT
- 2" BOTTOM OUTLET [BS4504, PN16 RAISED FACE FLANGE]
- REMOTE LEVEL GAUGE & BUND ALARM

MATERIALS CONTAINMENT:
- AD-BLUE [AUS 32, DIN 70070 GRADE]

TECHNICAL INFORMATION:
- PRODUCT WEIGHT [EMPTY OF FLUIDS] -
  - 5000 LITRE - 415KG
  - 7500 LITRE - 525KG
  - 10,000 LITRE - 635KG
- LEVEL GAUGE SETTING -
  - 5000 LITRE - 1, 2, 4, 5, 7.
  - 7500 LITRE - 1, 2, 3, 6.
  - 10,000 LITRE - 1, 2, 3, 5, 8.

GENERAL NOTES:
- ALL ELECTRICAL WORK MUST BE CARRIED OUT BY A QUALIFIED ELECTRICIAN
- FOLLOW INSTALLATION AND OPERATING INSTRUCTIONS

TANK MEASUREMENTS

-	A	B	C	D	E	F
5000LITRE	2005	2795	2885	2470	790	585
7500LITRE	2305	3115	3020	2670	810	665
10,000LITRE	2510	3320	3150	2770	825	715

ALL MEASUREMENTS ARE FOR REFERENCE ONLY
BALMORAL TANKS RESERVE THE RIGHT TO REVISE THEIR PRODUCT DESIGNS AT ANY TIME.

ISSUE	MODIFICATION	BY	CHK	APV	DATE
01	FIRST ISSUE	SI	BJB	BJB	11/03/08

Global HQ
Balmoral Park, Loirston, Aberdeen AB12 3GY
Tel +44 (0)1224 859000 Fax +44 (0)1224 859059
Email group@balmoral.co.uk www.balmoral-group.com

BALMORAL
www.balmoral-group.com

CLIENT: BALMORAL TANKS SALES

PROJECT No.: 6428

DRAWING TITLE: VB5000, 7500, 10,000 - G.A. SUPERBLUE
BBND-SB5000/7500/10000-NG-BE

DRAWN BY	CHECKED BY	APPROVED BY	DRAWING No.
S.IRONSIDE	B.BAKEWELL	B.BAKEWELL	INVD-007
SCALE	DATE	SHEET SIZE	JOB No.
1:20	11th MAR 2008	A2	

FOR INTERNAL USE ONLY