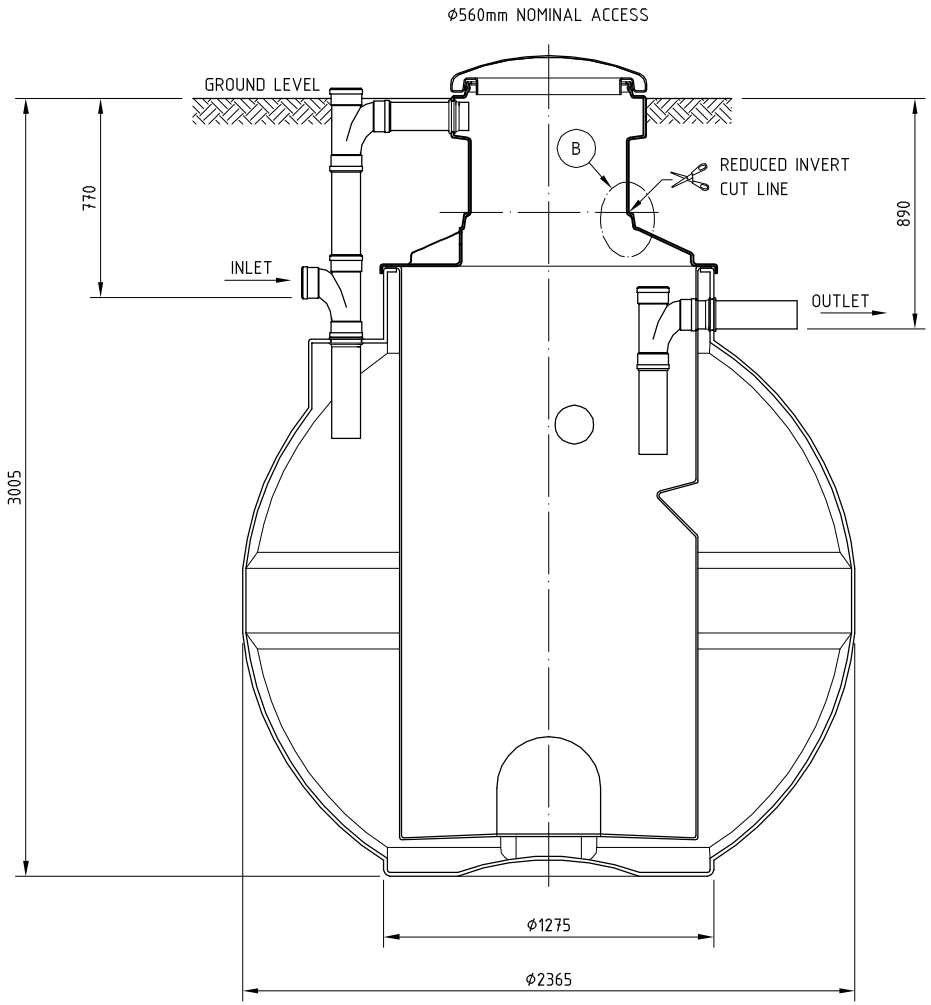

SECTION A-A

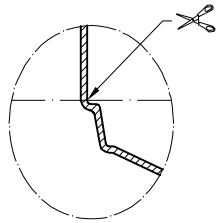

DETAIL 'B'

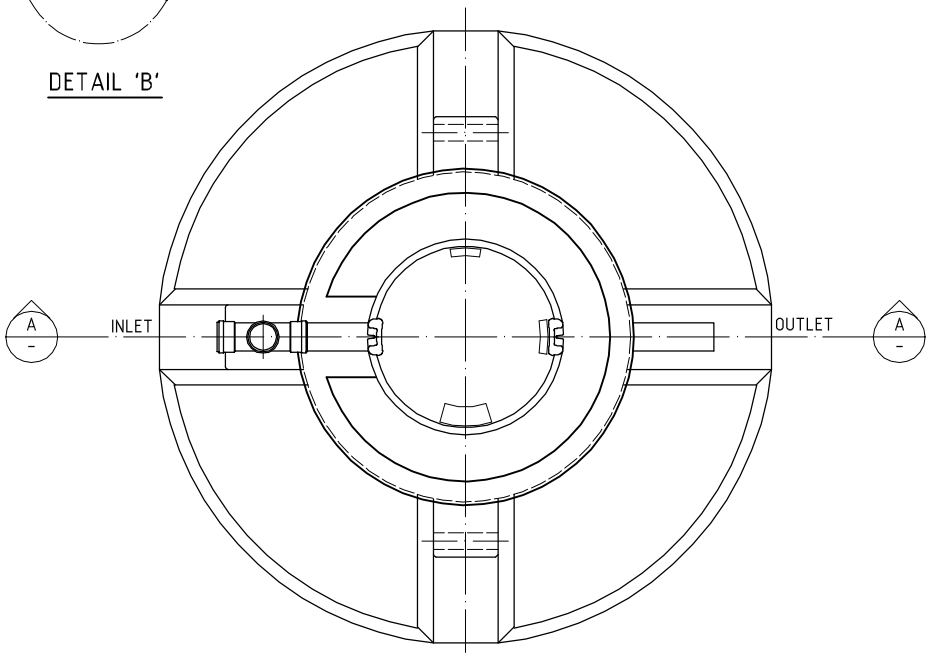

PLAN VIEW

GENERAL NOTES :
FOLLOW INSTALLATION INSTRUCTIONS PROVIDED WITH EACH TANK
ALL DIMENSIONS ARE IN MM AND ARE APPROXIMATE FOR INFORMATION ONLY
ALL PIPE-WORK 110mm DIAMETER

ISSUE	MODIFICATION	BY	CHK	APV	DATE
02	NOMINAL ACCESS NOTE ADDED	KG	SI	SI	20/02/08
01	FIRST ISSUE	KG	TM	TM	01/11/07

BALMORAL GROUP LTD
Balmoral Park, Loirston, Aberdeen AB12 3GY, Scotland
Telephone +44 (0)1224 859000 Fax +44 (0)1224 859059
E-mail group@balmoral.co.uk
BALMORAL
www.balmoral-group.com

THIS DRAWING IS COPYRIGHT AND IS ISSUED ON CONDITION THAT IT IS NOT COPIED, REPRODUCED OR DISCLOSED TO A THIRD PARTY WITHOUT CONSENT IN WRITING OF BALMORAL GROUP LTD., ABERDEEN

FIRST ANGLE PROJECTION ● THIRD ANGLE PROJECTION

ALL DIMENSIONS IN MILLIMETRES UNLESS STATED OTHERWISE - DO NOT SCALE
IF IN DOUBT - ASK

CLIENT	PROJECT No.
BALMORAL TANKS	6398

DRAWING TITLE: BST6000 SEPTIC TANK

DRAWN BY	CHECKED BY	APPROVED BY	DRAWING No.
K.Gibson	T.Mackley	T.Mackley	6398-04
SCALE	DATE	SHEET SIZE	JOB No.
1:20	November 2007	A3	STD. DRG.

FOR INTERNAL USE ONLY: VS WH JR SP Foam Buff Elast Fab QC IMcW Proj